Work Order ID 73905

Monday, September 19, 2011 8:12:00 AM

Ship Sep 29th

Item ID: D4030-041 **Accept** **Setup Start**

Revision ID: **Stop**

Item Name: Long Basket Assembly (350)

Start Date: 9/19/2011 **Start Qty:** 1.00 **Cust Item ID:**

Required Date: 9/28/2011 **Req'd Qty:** 1.00 **Customer:**

Reference:

Approvals: **Process Plan:** MF **Date:** 11-09-19 **Tooling:** **Date:** **Run Start**

QC: **Date:** **SPC (Y/N):** **Date:** **Stop**

Sequence ID/ Work Center ID	Operation Description	Set Up/ Run Hours	Tool ID	Tool #	Plan Code	Accept Qty	Reject Qty	Reject Number	Insp. Stamp
Draw Nbr / **Revision Nbr**									
D4030 / C									
100	Pick Kit	0.00							
Packaging	**Memo**	0.00				11/9/22			
Packaging									
110	Assemble as per dwg	0.00							
HandFinish	**Memo**	0.00				1	ϕ		11/08/23
Hand Finishing	****Mask label plate to size of D4086 label, use scotchbrite red pad to lightly sand area for label, apply label ****								
120	QC5- Inspect part completeness to step on W/O	0.00							
QC	**Memo**	0.00							
Quality Control									

11/08/23

Dart Aerospace Ltd

W/O:		WORK ORDER CHANGES					
DATE	STEP	PROCEDURE CHANGE	By	Date	Qty	Approval Chief Eng / Prod Mgr	Approval QC Inspector

Part No: _____ **PAR #:** _____ **Fault Category:** _____ **NCR:** Yes No **DQA:** _____ **Date:** _____

Resolution: _____ **Disposition:** _____ **QA: N/C Closed:** _____ **Date:** _____

NCR:		WORK ORDER NON-CONFORMANCE (NCR)						
DATE	STEP	Description of NC Section A	Corrective Action Section B			Verification Section C	Approval Chief Eng	Approval QC Inspector
			Initial Chief Eng	Action Description Chief Eng	Sign & Date			

NOTE: Date & initial all entries

H:\fFORMS\Quality Assurance\approved QA\NCRWO RevE

Work Order ID 73905

Monday, September 19, 2011 8:12:01 AM

Item ID: D4030-041 **Accept** **Setup Start**

Revision ID: **Stop**

Item Name: Long Basket Assembly (350)

Start Date: 9/19/2011 **Start Qty:** 1.00 **Cust Item ID:**

Required Date: 9/28/2011 **Req'd Qty:** 1.00 **Customer:**

Reference:

Approvals: **Process Plan:** _____ **Date:** _____ **Tooling:** _____ **Date:** _____ **Run Start**

QC: _____ **Date:** _____ **SPC (Y/N):** _____ **Date:** _____ **Stop**

Sequence ID/ Work Center ID	Operation Description	Set Up/ Run Hours	Tool ID	Tool #	Plan Code	Accept Qty	Reject Qty	Reject Number	Insp. Stamp
130	Identify as per dwg & Stock Location:_____	0.00	PP 73176			1962			
Packaging	Memo	0.00							
Packaging									
140	QC21- Final Inspection - Work Order Release	0.00						11/9/22	
QC	Memo	0.00							
Quality Control									

MF 11-09-22

Dart Aerospace Ltd

W/O:		WORK ORDER CHANGES					
DATE	STEP	PROCEDURE CHANGE	By	Date	Qty	Approval Chief Eng / Prod Mgr	Approval QC Inspector

Part No: _____ **PAR #:** _____ **Fault Category:** _____ **NCR:** Yes No **DQA:** _____ **Date:** _____

Resolution: _____ **Disposition:** _____ **QA: N/C Closed:** _____ **Date:** _____

NCR:		WORK ORDER NON-CONFORMANCE (NCR)						
DATE	STEP	Description of NC Section A	Corrective Action Section B			Verification Section C	Approval Chief Eng	Approval QC Inspector
			Initial Chief Eng	Action Description Chief Eng	Sign & Date			

NOTE: Date & initial all entries

Picklist Print

Monday, September 19, 2011 8:11:56 AM

8

Work Order ID: 73905

Parent Item: D4030-041

Parent Item Name: Long Basket Assembly (350)

Start Date: 9/19/2011 **Required Date:** 9/28/2011

Start Qty: 1.00 **Required Qty:** 1.00

Comments: IPP Rev:A new issue DD 10.03.23 verified by:EC IPP Rev:B as per dwg revB DD 10.04.20 verified by:EC IPP Rev:C as per dwg revC DD 10.08.18 verified by:EC

Component Item ID/ Item Name	Replacement Item ID	Mfg/ Purch	Bin Item	Primary Location	Last Location	Route Seq ID	Unit of Measure	Qty on Hand	Qty per Kit	Total Qty	Qty Issued	Date Issued	Status
D4086-210 Placard, Max Load		Manufactured	No				Each	9.0000		1			
				Location			**Loc Qty**		**Loc Code**				
				ST122			8						
					66275		8						
				ST124			1						
					64869		1						
D2530 Handle Weldment		Manufactured	No			100	Each	9.0000	1	1			
				Location			**Loc Qty**		**Loc Code**				
				ST506			8						
					72166		8						
				ST508			1						
					69318		1						
D2535 Spring		Manufactured	No			100	Each	81.0000	2	2			
				Location			**Loc Qty**		**Loc Code**				
				ST504			81						
					71117		81						

Dart Aerospace Ltd

W/O:		WORK ORDER CHANGES					
DATE	STEP	PROCEDURE CHANGE	By	Date	Qty	Approval Chief Eng / Prod Mgr	Approval QC Inspector

Part No: _____ **PAR #:** _____ **Fault Category:** _____ **NCR:** Yes No **DQA:** _____ **Date:** _____

Resolution: _____ **Disposition:** _____ **QA: N/C Closed:** _____ **Date:** _____

NCR:		WORK ORDER NON-CONFORMANCE (NCR)						
DATE	STEP	Description of NC Section A	Corrective Action Section B			Verification Section C	Approval Chief Eng	Approval QC Inspector
			Initial Chief Eng	Action Description Chief Eng	Sign & Date			

NOTE: Date & initial all entries

H:\fFORMS\Quality Assurance\approved QA\NCRWO RevE

Picklist Print

Monday, September 19, 2011 8:11:56 AM

Work Order ID: 73905

Parent Item: D4030-041

Parent Item Name: Long Basket Assembly (350)

Start Date: 9/19/2011 **Required Date:** 9/28/2011

Start Qty: 1.00 **Required Qty:** 1.00

D2537	Manufactured	No	100	Each	25.0000	2	2	
Bushing								

Location	Loc Qty	Loc Code
ST504	25	
71853	25	

D3913-041	Manufactured	No	100	Each	0.0000	1	1	1373906 (x1)
Long Basket Base Assemby, 350								
D3914-041	Manufactured	No	100	Each	0.0000	1	1	1373907 (x1)
Long Basket Lid Assembly (350)								
D3917-3	Manufactured	No	100	Each	7.0000	6	6 (5)	1373332 (5)
Washer								

Location	Loc Qty	Loc Code
ST092	7	
72142	7	

D3953-3	Manufactured	No	100	Each	12.0000	2	2	1149228
Gas Spring Stud, Lid								

Location	Loc Qty	Loc Code
ST096	12	
71875	12	

Dart Aerospace Ltd

W/O:		WORK ORDER CHANGES					
DATE	STEP	PROCEDURE CHANGE	By	Date	Qty	Approval Chief Eng / Prod Mgr	Approval QC Inspector

Part No: _____ **PAR #:** _____ **Fault Category:** _____ **NCR:** Yes No **DQA:** _____ **Date:** _____

Resolution: _____ **Disposition:** _____ **QA: N/C Closed:** _____ **Date:** _____

NCR:		WORK ORDER NON-CONFORMANCE (NCR)						
DATE	STEP	Description of NC Section A	Corrective Action Section B			Verification Section C	Approval Chief Eng	Approval QC Inspector
			Initial Chief Eng	Action Description Chief Eng	Sign & Date			

NOTE: Date & initial all entries

H:\fFORMS\Quality Assurance\approved QA\NCRWO RevE

Picklist Print

Monday, September 19, 2011 8:11:56 AM

Work Order ID: 73905

Parent Item: D4030-041

Parent Item Name: Long Basket Assembly (350)

Start Date: 9/19/2011 **Required Date:** 9/28/2011

Start Qty: 1.00 **Required Qty:** 1.00

D3953-7	Manufactured	No	100	Each	9.0000	2	2	
Spring Spacer								

Location	Loc Qty	Loc Code
ST096	9	
65053	4	
71885	5	

D3953-9	Manufactured	No	100	Each	8.0000	2	2	
Gas Spring Washer								

Location	Loc Qty	Loc Code
ST096	8	
69025	4	
71869	4	

D3953-17	Manufactured	No	100	Each	30.0000	2	2	
Gas Spring Spacer								

Location	Loc Qty	Loc Code
ST096	30	
73474	30	

D3953-19	Manufactured	No	100	Each	14.0000	1	1	
Gas Spring Bracket								

Location	Loc Qty	Loc Code
ST096	14	
59213	1	
68462	3	
73551	10	

Dart Aerospace Ltd

W/O:		WORK ORDER CHANGES					
DATE	STEP	PROCEDURE CHANGE	By	Date	Qty	Approval Chief Eng / Prod Mgr	Approval QC Inspector

Part No: _____ **PAR #:** _____ **Fault Category:** _____ **NCR:** Yes No **DQA:** _____ **Date:** _____

Resolution: _____ **Disposition:** _____ **QA: N/C Closed:** _____ **Date:** _____

NCR:		WORK ORDER NON-CONFORMANCE (NCR)						
DATE	STEP	Description of NC Section A	Corrective Action Section B			Verification Section C	Approval Chief Eng	Approval QC Inspector
			Initial Chief Eng	Action Description Chief Eng	Sign & Date			

NOTE: Date & initial all entries

H:\fFORMS\Quality Assurance\approved QA\NCRWO RevE

Picklist Print

Monday, September 19, 2011 8:11:57 AM

Work Order ID: 73905

Parent Item: D4030-041

Parent Item Name: Long Basket Assembly (350)

Start Date: 9/19/2011 **Required Date:** 9/28/2011

Start Qty: 1.00 **Required Qty:** 1.00

D3953-21	Manufactured	No	100	Each	20.0000	1		
Gas Spring Bracket								

Location	Loc Qty	Loc Code
ST096	20	
68463	3	
73557	17	

D3969-3	Manufactured	No	100	Each	34.0000	1	1	
Spring (Basket Lid)								

Location	Loc Qty	Loc Code
ST272	34	
64285	1	
68925	3	
73515	30	

AN3-14A	Purchased	No	100	Each	76.0000	4	4	
Bolt								

Location	Loc Qty	Loc Code
ST352	76	
117872	76	

AN3-16A	Purchased	No	100	Each	169.0000	2	2	11/9/22
Bolt								

Location	Loc Qty	Loc Code
ST352	169	
117441	69	
118628	100	

Dart Aerospace Ltd

W/O:		WORK ORDER CHANGES					
DATE	STEP	PROCEDURE CHANGE	By	Date	Qty	Approval Chief Eng / Prod Mgr	Approval QC Inspector

Part No: _____ **PAR #:** _____ **Fault Category:** _____ **NCR:** Yes No **DQA:** _____ **Date:** _____

Resolution: _____ **Disposition:** _____ **QA: N/C Closed:** _____ **Date:** _____

NCR:		WORK ORDER NON-CONFORMANCE (NCR)						
DATE	STEP	Description of NC Section A	Corrective Action Section B			Verification Section C	Approval Chief Eng	Approval QC Inspector
			Initial Chief Eng	Action Description Chief Eng	Sign & Date			

NOTE: Date & initial all entries

H:\fFORMS\Quality Assurance\approved QA\NCRWO RevE

Picklist Print

Monday, September 19, 2011 8:11:57 AM

Work Order ID: 73905

Parent Item: D4030-041

Parent Item Name: Long Basket Assembly (350)

Start Date: 9/19/2011 **Required Date:** 9/28/2011

Start Qty: 1.00 **Required Qty:** 1.00

AN5-17A Bolt	Purchased	No	100	Each	102.0000	4	4	

Location		Loc Qty	Loc Code	
ST337		8		
	118422	8		2
ST339		94		
	117872	44		
	118706	50		2

AN4-12 Bolt	Purchased	No	100	Each	72.0000	3	3	

Location		Loc Qty	Loc Code	
ST357		72		
	117514	22		3
	118626	50		

AN310-4 NUT	Purchased	No	100	Each	21.0000	3	3	

Location		Loc Qty	Loc Code	
ST324		21		
	118112	21		3

AN310C4 Nut	Purchased	No	100	Each	47.0000	2	2	4/22

Location		Loc Qty	Loc Code	
ST324		47		
	116741	4		
	117395	13		2
	118090	10		
	118626	20		

Dart Aerospace Ltd

W/O:		WORK ORDER CHANGES					
DATE	STEP	PROCEDURE CHANGE	By	Date	Qty	Approval Chief Eng / Prod Mgr	Approval QC Inspector

Part No: _____ **PAR #:** _____ **Fault Category:** _____ **NCR:** Yes No **DQA:** _____ **Date:** _____

Resolution: _____ **Disposition:** _____ **QA: N/C Closed:** _____ **Date:** _____

NCR:		WORK ORDER NON-CONFORMANCE (NCR)						
DATE	STEP	Description of NC Section A	Corrective Action Section B			Verification Section C	Approval Chief Eng	Approval QC Inspector
			Initial Chief Eng	Action Description Chief Eng	Sign & Date			

NOTE: Date & initial all entries

H:\fFORMS\Quality Assurance\approved QA\NCRWO RevE

Picklist Print

Monday, September 19, 2011 8:11:57 AM

Work Order ID: 73905

Parent Item: D4030-041

Parent Item Name: Long Basket Assembly (350)

Start Date: 9/19/2011 **Required Date:** 9/28/2011

Start Qty: 1.00 **Required Qty:** 1.00

MS21042L3	Purchased	No	100	Each	2,601.000	6	6	
Nut								

Location	Loc Qty	Loc Code
ST300	2601	
117441	24	
117601	372	6
117885	205	
118451	1000	
118927	1000	

MS21042L5	Purchased	No	100	Each	1,291.000	4	4	
Nut								

Location	Loc Qty	Loc Code
ST300	1291	
116105	5	
116548	53	
117441	347	4
117611	90	
118179	496	
118910	300	

MS24665-151	Purchased	No	100	Each	414.0000	3	3	11/9/22
Cotter Pin								

Location	Loc Qty	Loc Code
ST309	414	
17566	414	3

Dart Aerospace Ltd

W/O:		WORK ORDER CHANGES					
DATE	STEP	PROCEDURE CHANGE	By	Date	Qty	Approval Chief Eng / Prod Mgr	Approval QC Inspector

Part No: _____ **PAR #:** _____ **Fault Category:** _____ **NCR:** Yes No **DQA:** _____ **Date:** _____

Resolution: _____ **Disposition:** _____ **QA: N/C Closed:** _____ **Date:** _____

NCR:		WORK ORDER NON-CONFORMANCE (NCR)						
DATE	STEP	Description of NC Section A	Corrective Action Section B			Verification Section C	Approval Chief Eng	Approval QC Inspector
			Initial Chief Eng	Action Description Chief Eng	Sign & Date			

NOTE: Date & initial all entries

H:\fFORMS\Quality Assurance\approved QA\NCRWO RevE

Picklist Print

Monday, September 19, 2011 8:11:57 AM

Work Order ID: 73905

Parent Item: D4030-041

Parent Item Name: Long Basket Assembly (350)

Start Date: 9/19/2011 **Required Date:** 9/28/2011

Start Qty: 1.00 **Required Qty:** 1.00

MS24665-300	Purchased	No	100	Each	248.0000	2	2	
Cotter Pin								

Location		Loc Qty	Loc Code
GA		200	
	118234	200	
ST309		48	
	116823	48	

NAS1149F0432P	Purchased	No	100	Each	218.0000	6	6	
Washer								

Location		Loc Qty	Loc Code
ST275		218	
	117291	8	
	118612	10	
	118840	200	

NAS1149F0563P	Purchased	No	100	Each	180.0000	4	4	
Washer								

Location		Loc Qty	Loc Code
ST297		180	
	117735	180	

NAS1149F0332P	Purchased	No	100	Each	162.0000	8	8	11/9/22
WASHER								

Location		Loc Qty	Loc Code
ST275		162	
	117735	63	
	118354	96	
	17317	3	

Dart Aerospace Ltd

W/O:		WORK ORDER CHANGES					
DATE	STEP	PROCEDURE CHANGE	By	Date	Qty	Approval Chief Eng / Prod Mgr	Approval QC Inspector

Part No: _____ **PAR #:** _____ **Fault Category:** _____ **NCR:** Yes No **DQA:** _____ **Date:** _____

Resolution: _____ **Disposition:** _____ **QA: N/C Closed:** _____ **Date:** _____

NCR:		WORK ORDER NON-CONFORMANCE (NCR)						
DATE	STEP	Description of NC Section A	Corrective Action Section B			Verification Section C	Approval Chief Eng	Approval QC Inspector
			Initial Chief Eng	Action Description Chief Eng	Sign & Date			

NOTE: Date & initial all entries

Picklist Print

Monday, September 19, 2011 8:11:57 AM

Work Order ID: 73905

Parent Item: D4030-041

Parent Item Name: Long Basket Assembly (350)

Start Date: 9/19/2011 **Required Date:** 9/28/2011

Start Qty: 1.00 **Required Qty:** 1.00

NAS1149C0432R	Purchased	No	100	Each	4,430.000	2	2	11/9/2

Washer

Location	Loc Qty	Loc Code
ST297	4430	
117291	4430	

2

Dart Aerospace Ltd

W/O:		WORK ORDER CHANGES					
DATE	STEP	PROCEDURE CHANGE	By	Date	Qty	Approval Chief Eng / Prod Mgr	Approval QC Inspector

Part No: _____ **PAR #:** _____ **Fault Category:** _____ **NCR:** Yes No **DQA:** _____ **Date:** _____

Resolution: _____ **Disposition:** _____ **QA: N/C Closed:** _____ **Date:** _____

NCR:		WORK ORDER NON-CONFORMANCE (NCR)						
DATE	STEP	Description of NC Section A	Corrective Action Section B			Verification Section C	Approval Chief Eng	Approval QC Inspector
			Initial Chief Eng	Action Description Chief Eng	Sign & Date			

NOTE: Date & initial all entries

H:\fFORMS\Quality Assurance\approved QA\NCRWO RevE

ITEM	QTY -041	QTY -043	P/N	DESCRIPTION
	X		D4030-041	LONG BASKET ASSY (350)
		X	D4030-043	LONG BASKET ASSY, LIGHT LID (350)
1	1	1	D2530	HANDLE WELDMENT
2	2	2	D2535	SPRING
3	2	2	D2537	BUSHING
4	1	1	D3913-041	LONG BASKET BASE ASSY (350)
5	1		D3914-041	LONG BASKET, LID ASSY (350)
6		1	D3915-041	LIGHT LID ASSY-LONG BASKET
7	6	6	D3917-3	WASHER
8	2	2	D3953-3	GAS SPRING STUD, LID
9	2	2	D3953-7	GAS SPRING SPACER
10	2	2	D3953-9	GAS SPRING WASHER
11	2	2	D3953-17	GAS SPRING SPACER
12	1	1	D3953-19	GAS SPRING BRACKET
13	1	1	D3953-21	GAS SPRING BRACKET
14	1	1	D3969-3	SPRING
15	4	4	AN3-14A	BOLT
16	2		AN3-16A	BOLT
17		2	AN3-20A	BOLT
18	3	3	AN4-12	BOLT (DRILLED)
19	4	2	AN5-17A	BOLT
20		2	AN5-21A	BOLT
21	3	3	AN310-4	NUT, CASTELLATED
22	2	2	AN310C4	NUT, CASTELLATED
23	6	6	MS21042L3	NUT
24	4	4	MS21042L5	NUT
25	3	3	MS24665-151	COTTER PIN
26	2	2	MS24665-300	COTTER PIN
27	6	6	NAS1149F0432P	WASHER
28	4	4	NAS1149F0563P	WASHER
30	8	8	NAS1149F0332P	WASHER
31	2	2	NAS1149C0432R	WASHER

C

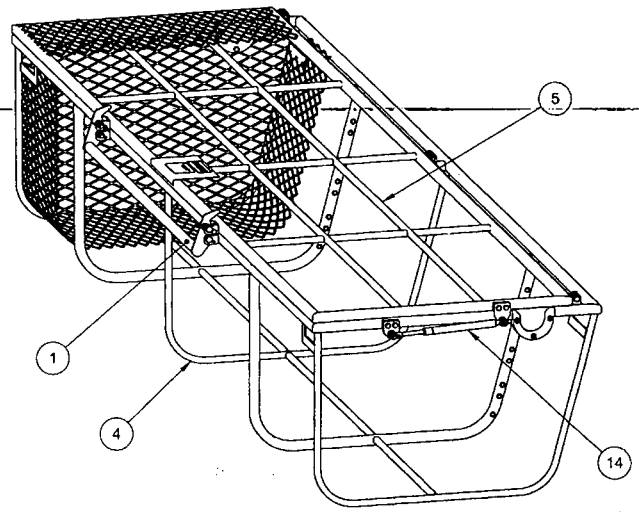

D4030-041 LONG BASKET ASSY (350)
(MESH SHOWN LOCALLY FOR CLARITY)

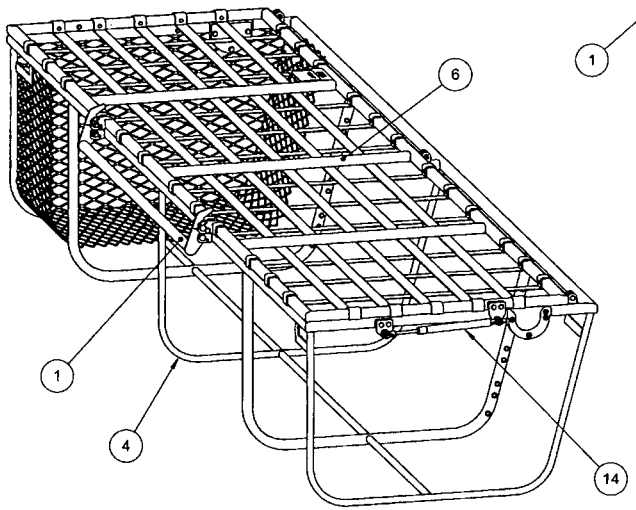

D4030-043 LONG BASKET ASSY, LIGHT LID (350)
(MESH SHOWN LOCALLY FOR CLARITY)

73905

RELEASED
10.08.12
ECN 10-596

NOTES:
1) MATERIAL: N/A
2) FINISH: NONE
3) TOLERANCES: PER DART QSI 018 UNLESS OTHERWISE NOTED
4) UNITS: INCHES UNLESS OTHERWISE NOTED
5) BREAK SHARP EDGES: N/A
6) IDENTIFICATION: N/A
7) WEIGHT: -041: 72 lbs APPROX
-043: 57 lbs APPROX

REV.	DESCRIPTION	BY	DATE
C	QTY FOR ITEMS #30 & #31 UNDER -043 WERE MISSING (B8-1); QTY FOR ITEM #3 WAS 4 (D6-1), ONLY 2 ARE REQUIRED, AFFECTS SECTION C-C (D3-3).	MB	10.07.23
B	AN5-21A BOLT WAS AN5-19A: BOM & (D3-3)	JPH	10.04.06
A	NEW ISSUE	JPH	10.03.16

DESIGN	AJS	**DART AEROSPACE LTD** HAWKESBURY, ONTARIO, CANADA
DRAWN		
CHECKED		DRAWING NO. D4030 — REV. C — SHEET 1 OF 3
MFG. APPR.	JFS	
APPROVED		TITLE: LONG BASKET ASSY (350) — SCALE: NTS
DE APPR.		
DATE	10.07.23	

COPYRIGHT © 2010 BY DART AEROSPACE LTD
THIS DOCUMENT IS PRIVATE AND CONFIDENTIAL AND IS SUPPLIED ON THE EXPRESS CONDITION THAT IT IS NOT TO BE USED FOR ANY PURPOSE OR COPIED OR COMMUNICATED TO ANY OTHER PERSON WITHOUT WRITTEN PERMISSION FROM DART AEROSPACE LTD.

Dart Aerospace Ltd

W/O:		WORK ORDER CHANGES					
DATE	STEP	PROCEDURE CHANGE	By	Date	Qty	Approval Chief Eng / Prod Mgr	Approval QC Inspector

Part No: _____ **PAR #:** _____ **Fault Category:** _____ **NCR:** Yes No **DQA:** _____ **Date:** _____

Resolution: _____ **Disposition:** _____ **QA: N/C Closed:** _____ **Date:** _____

NCR:		WORK ORDER NON-CONFORMANCE (NCR)						
DATE	STEP	Description of NC Section A	Corrective Action Section B			Verification Section C	Approval Chief Eng	Approval QC Inspector
			Initial Chief Eng	Action Description Chief Eng	Sign & Date			

NOTE: Date & initial all entries

H:\fFORMS\Quality Assurance\approved QA\NCRWO RevE

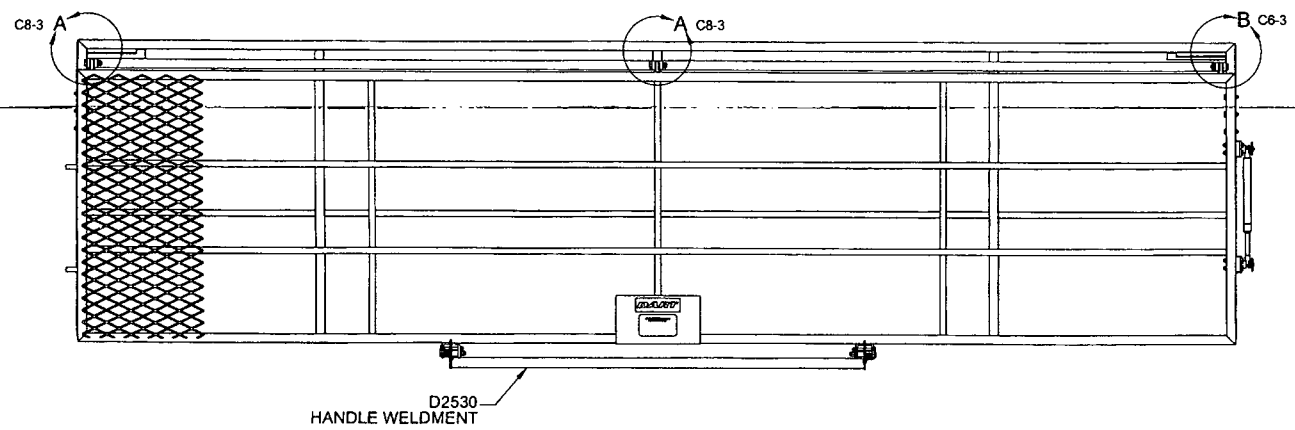

#73905

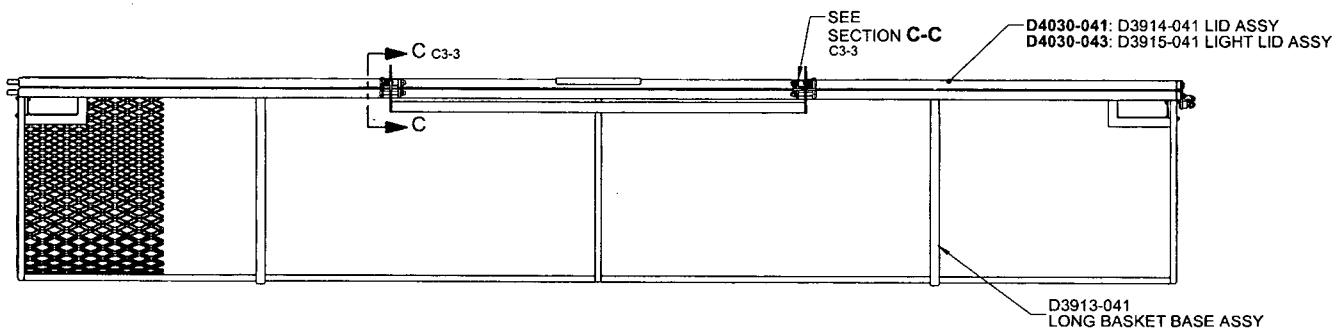

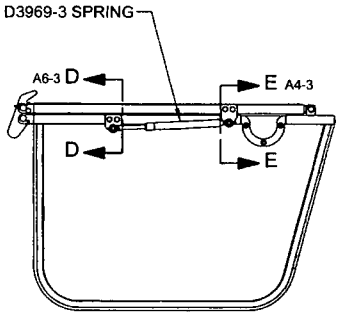

RELEASED 10.08.17 CP

D4030-041 LONG BASKET ASSY (350) (SHOWN)
(MESH SHOWN LOCALLY OR REMOVED FOR CLARITY)

D4030-043 SHORT BASKET ASSY, LIGHT LID (350)
(MESH SHOWN LOCALLY FOR CLARITY)

DESIGN	A.J.S	**DART AEROSPACE LTD** HAWKESBURY, ONTARIO, CANADA
DRAWN		
CHECKED		DRAWING NO. D4030 — REV. C — SHEET 2 OF 3
MFG. APPR.		
APPROVED		TITLE LONG BASKET ASSY (350) — SCALE NTS
DE APPR.		
DATE	10.07.23	

COPYRIGHT © 2010 BY DART AEROSPACE LTD
THIS DOCUMENT IS PRIVATE AND CONFIDENTIAL AND IS SUPPLIED ON THE EXPRESS CONDITION THAT IT IS NOT TO BE USED FOR ANY PURPOSE OR COPIED OR COMMUNICATED TO ANY OTHER PERSON WITHOUT WRITTEN PERMISSION FROM DART AEROSPACE LTD.

Dart Aerospace Ltd

W/O:		WORK ORDER CHANGES					
DATE	STEP	PROCEDURE CHANGE	By	Date	Qty	Approval Chief Eng / Prod Mgr	Approval QC Inspector

Part No: _____ **PAR #:** _____ **Fault Category:** _____ **NCR:** Yes No **DQA:** _____ **Date:** _____

Resolution: _____ **Disposition:** _____ **QA: N/C Closed:** _____ **Date:** _____

NCR:		WORK ORDER NON-CONFORMANCE (NCR)						
DATE	STEP	Description of NC Section A	Corrective Action Section B			Verification Section C	Approval Chief Eng	Approval QC Inspector
			Initial Chief Eng	Action Description Chief Eng	Sign & Date			

NOTE: Date & initial all entries

H:\fFORMS\Quality Assurance\approved QA\NCRWO RevE

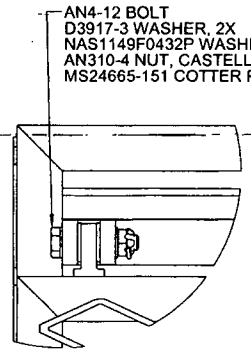

DETAIL A D8-2 D5-2

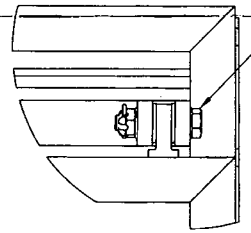

DETAIL B D3-2

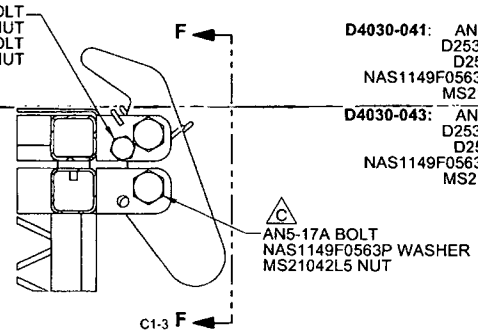

SECTION C-C B4-2 B6-2

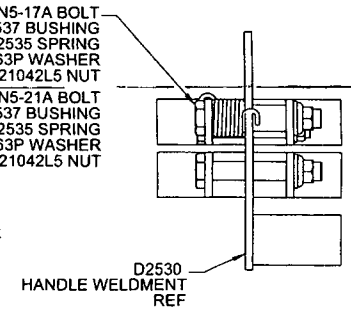

VIEW F-F C3-3

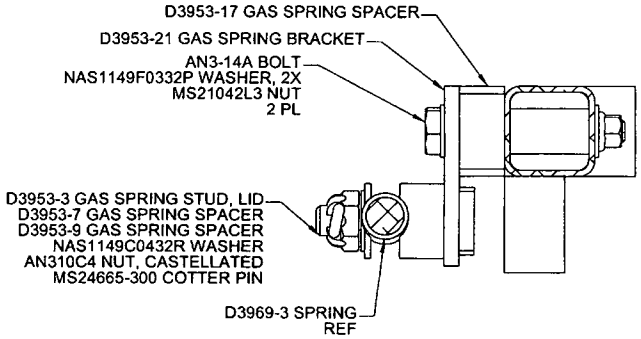

SECTION D-D B2-2

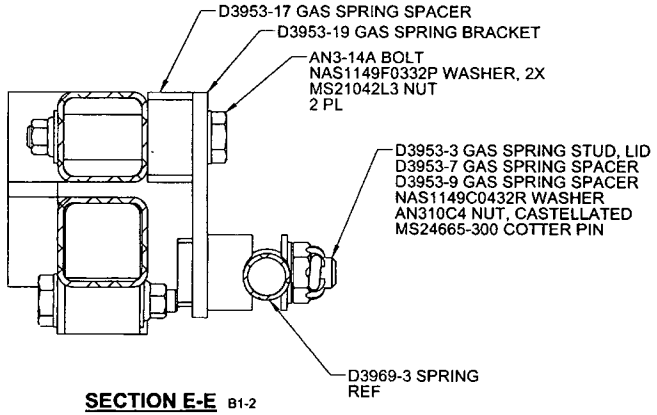

SECTION E-E B1-2

73965

RELEASED 10.08.24

DESIGN	A.J.S	**DART AEROSPACE LTD** HAWKESBURY, ONTARIO, CANADA
DRAWN		
CHECKED		DRAWING NO. D4030 — REV. C — SHEET 3 OF 3
MFG. APPR.	J.F.S.	
APPROVED		TITLE — SCALE
DE.APPR.		LONG BASKET-ASSY (350) — NTS
DATE	10.07.23	

COPYRIGHT © 2010 BY DART AEROSPACE LTD
THIS DOCUMENT IS PRIVATE AND CONFIDENTIAL AND IS SUPPLIED ON THE EXPRESS CONDITION THAT IT IS NOT TO BE USED FOR ANY PURPOSE OR COPIED OR COMMUNICATED TO ANY OTHER PERSON WITHOUT WRITTEN PERMISSION FROM DART AEROSPACE LTD

Dart Aerospace Ltd

W/O:		WORK ORDER CHANGES					
DATE	STEP	PROCEDURE CHANGE	By	Date	Qty	Approval Chief Eng / Prod Mgr	Approval QC Inspector

Part No: _____ **PAR #:** _____ **Fault Category:** _____ **NCR:** Yes No **DQA:** _____ **Date:** _____

Resolution: _____ **Disposition:** _____ **QA: N/C Closed:** _____ **Date:** _____

NCR:		WORK ORDER NON-CONFORMANCE (NCR)						
DATE	STEP	Description of NC Section A	Corrective Action Section B			Verification Section C	Approval Chief Eng	Approval QC Inspector
			Initial Chief Eng	Action Description Chief Eng	Sign & Date			

NOTE: Date & initial all entries

H:\fFORMS\Quality Assurance\approved QA\NCRWO RevE